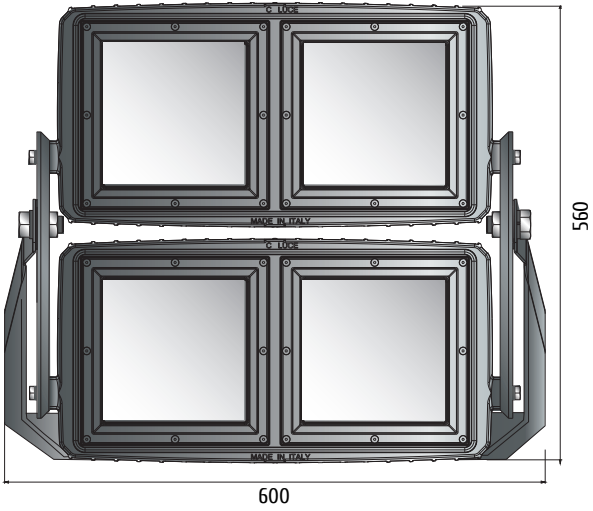
C LUCE
MADE IN ITALY
C LUCE
MADE IN ITALY
560
600

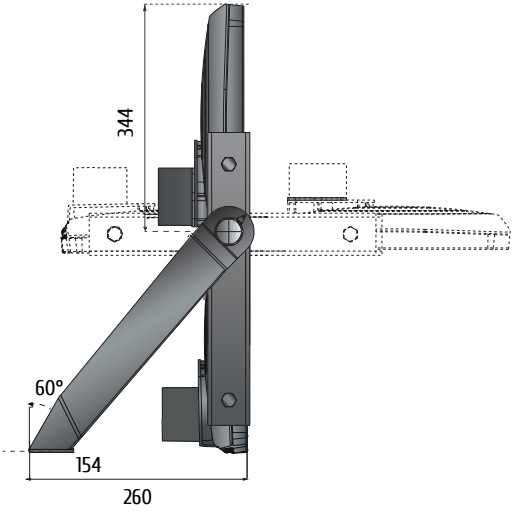
344
60°
154
260

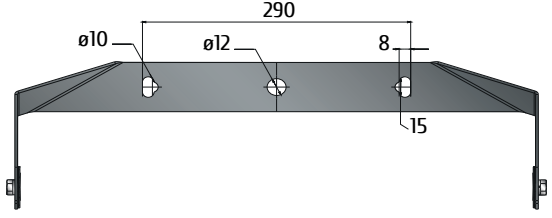
290
ø10
ø12
8
15